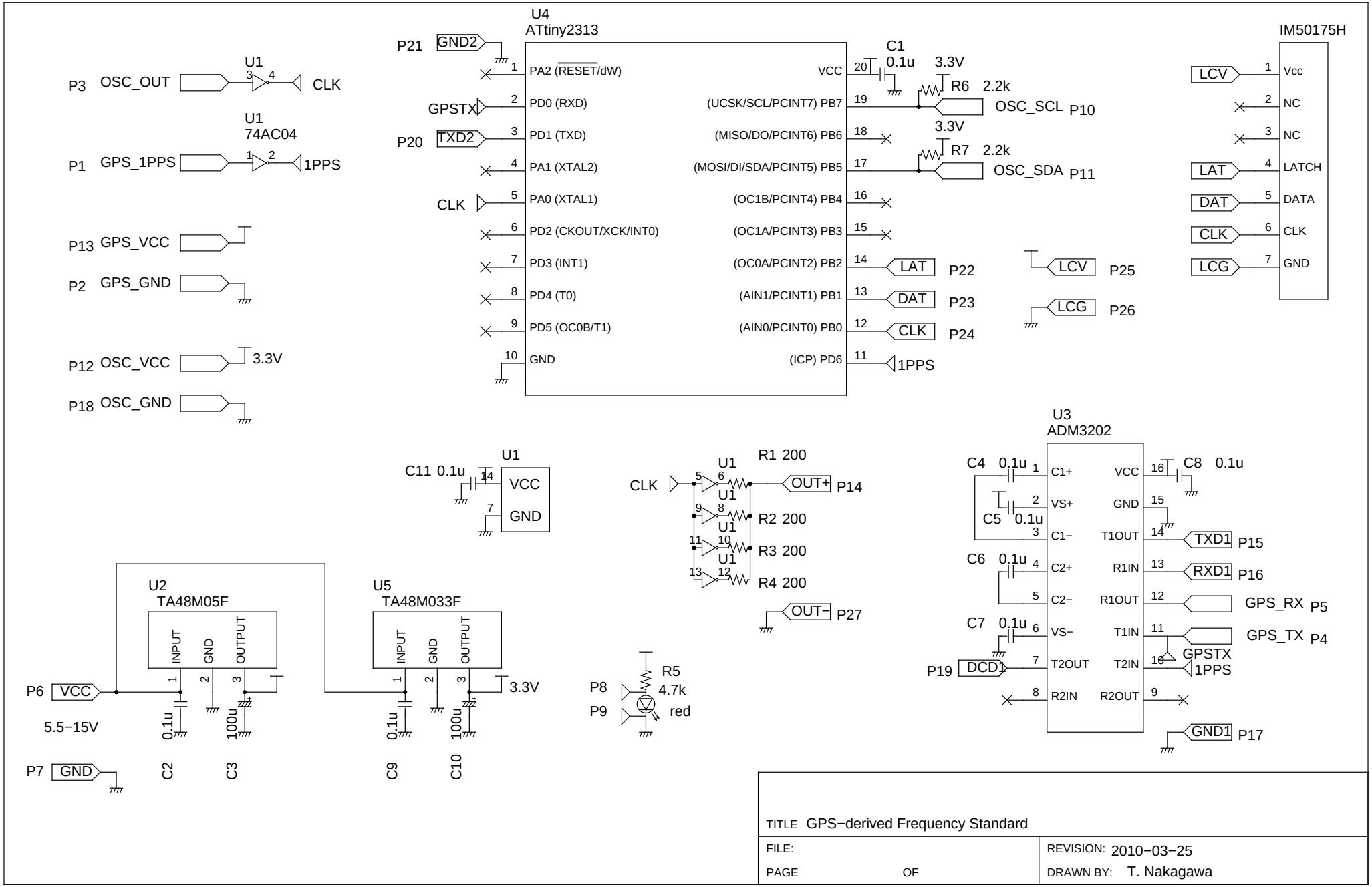
U4
ATtiny2313
P21 GND2
GPSTX
P20 TXD2
CLK
PA2 (RESET/dW)
PD0 (RXD)
PD1 (TXD)
PA1 (XTAL2)
PA0 (XTAL1)
PD2 (CKOUT/XCK/INT0)
PD3 (INT1)
PD4 (T0)
PD5 (OC0B/T1)
GND
VCC
(UCSK/SCL/PCINT7) PB7
(MISO/DO/PCINT6) PB6
(MOSI/DI/SDA/PCINT5) PB5
(OC1B/PCINT4) PB4
(OC1A/PCINT3) PB3
(OC0A/PCINT2) PB2
(AIN1/PCINT1) PB1
(AIN0/PCINT0) PB0
(ICP) PD6
C1 0.1u
3.3V
R6 2.2k
OSC_SCL P10
R7 2.2k
OSC_SDA P11
LAT P22
DAT P23
CLK P24
1PPS
LCV P25
LCG P26
IM50175H
LCV
NC
NC
LAT
DAT
CLK
LCG
Vcc
LATCH
DATA
CLK
GND
P3 OSC_OUT
U1
CLK
U1
74AC04
P1 GPS_1PPS
1PPS
P13 GPS_VCC
P2 GPS_GND
P12 OSC_VCC
3.3V
P18 OSC_GND
U1
C11 0.1u
VCC
GND
CLK
U1
R1 200
OUT+ P14
R2 200
R3 200
R4 200
OUT− P27
U3
ADM3202
C4 0.1u
C5 0.1u
C6 0.1u
C7 0.1u
C8 0.1u
C1+
VS+
C1−
C2+
C2−
VS−
T2OUT
R2IN
VCC
GND
T1OUT
R1IN
R1OUT
T1IN
T2IN
R2OUT
TXD1 P15
RXD1 P16
GPS_RX P5
GPS_TX P4
GPSTX
1PPS
P19 DCD1
GND1 P17
U2
TA48M05F
INPUT
GND
OUTPUT
P6 VCC
5.5−15V
P7 GND
0.1u
100u
C2
C3
U5
TA48M033F
3.3V
C9
C10
P8
P9
R5
4.7k
red
TITLE GPS−derived Frequency Standard
FILE:
PAGE OF
REVISION: 2010−03−25
DRAWN BY: T. Nakagawa