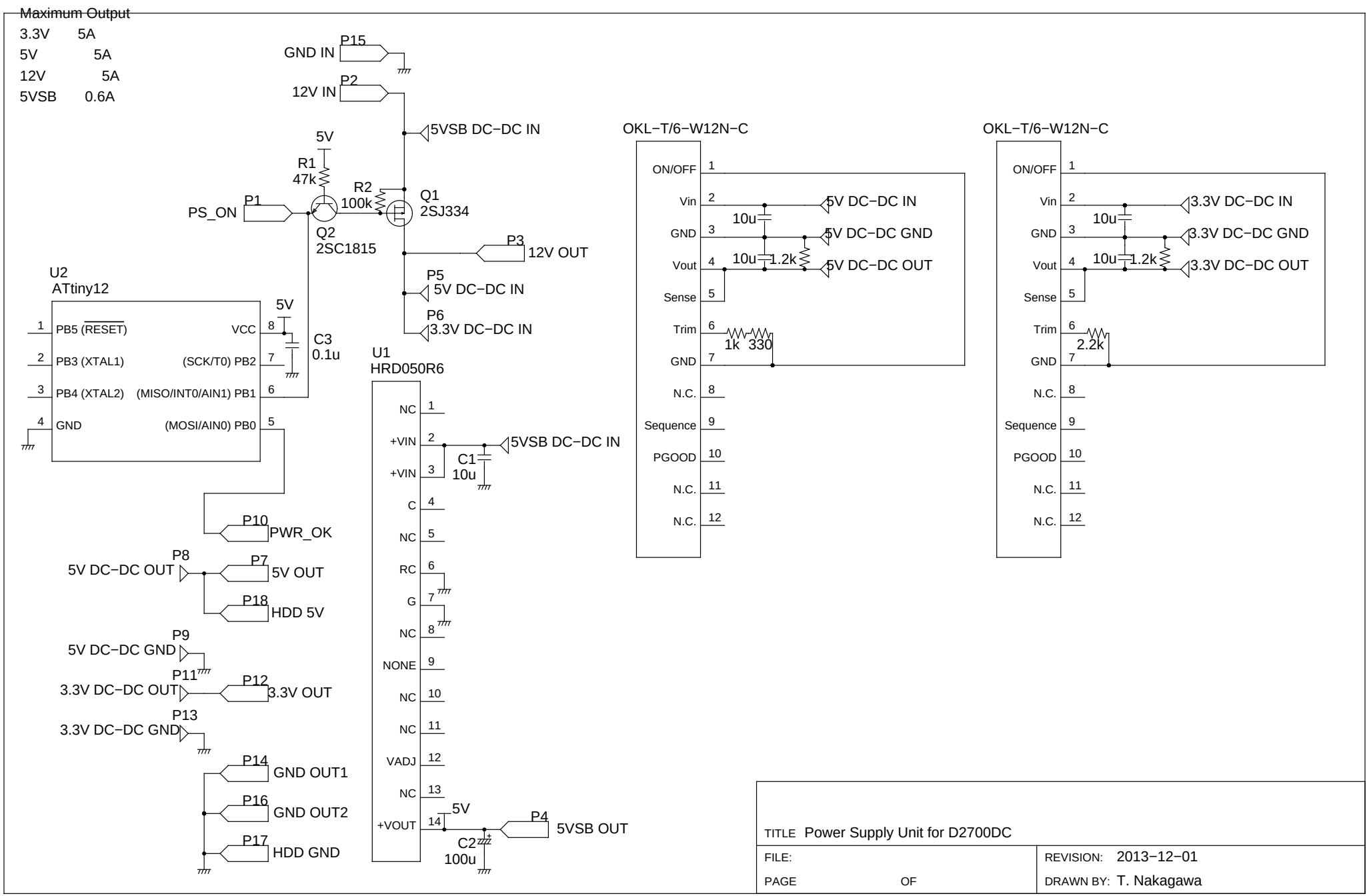
Maximum Output
3.3V 5A
5V 5A
12V 5A
5VSB 0.6A
GND IN
P15
12V IN
P2
5VSB DC−DC IN
5V
R1
47k
R2
100k
Q1
2SJ334
PS_ON
P1
Q2
2SC1815
P3
12V OUT
P5
5V DC−DC IN
P6
3.3V DC−DC IN
U2
ATtiny12
PB5 (RESET)
PB3 (XTAL1)
PB4 (XTAL2)
GND
VCC
(SCK/T0) PB2
(MISO/INT0/AIN1) PB1
(MOSI/AIN0) PB0
C3
0.1u
U1
HRD050R6
NC
+VIN
C
RC
G
NONE
VADJ
+VOUT
C1
10u
C2
100u
P4
5VSB OUT
P10
PWR_OK
P8
5V DC−DC OUT
P7
5V OUT
P18
HDD 5V
P9
5V DC−DC GND
P11
3.3V DC−DC OUT
P12
3.3V OUT
P13
3.3V DC−DC GND
P14
GND OUT1
P16
GND OUT2
P17
HDD GND
OKL−T/6−W12N−C
ON/OFF
Vin
GND
Vout
Sense
Trim
Sequence
PGOOD
N.C.
5V DC−DC IN
5V DC−DC GND
5V DC−DC OUT
10u
1.2k
1k
330
OKL−T/6−W12N−C
3.3V DC−DC IN
3.3V DC−DC GND
3.3V DC−DC OUT
2.2k
TITLE Power Supply Unit for D2700DC
FILE:
PAGE OF
REVISION: 2013−12−01
DRAWN BY: T. Nakagawa