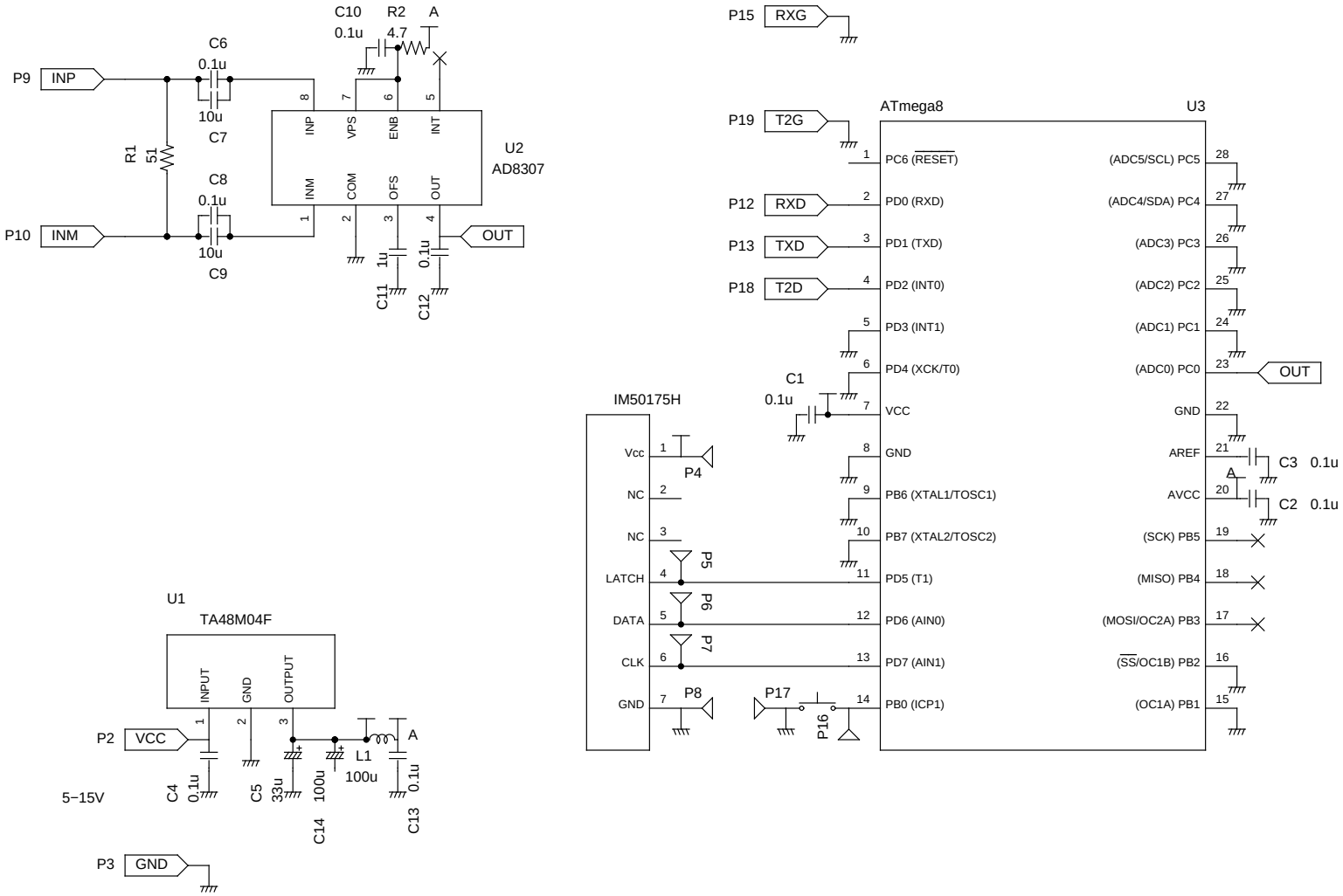

TITLE RF Powermeter	
FILE:	REVISION: 2010−02−27
PAGE OF	DRAWN BY: T. Nakagawa