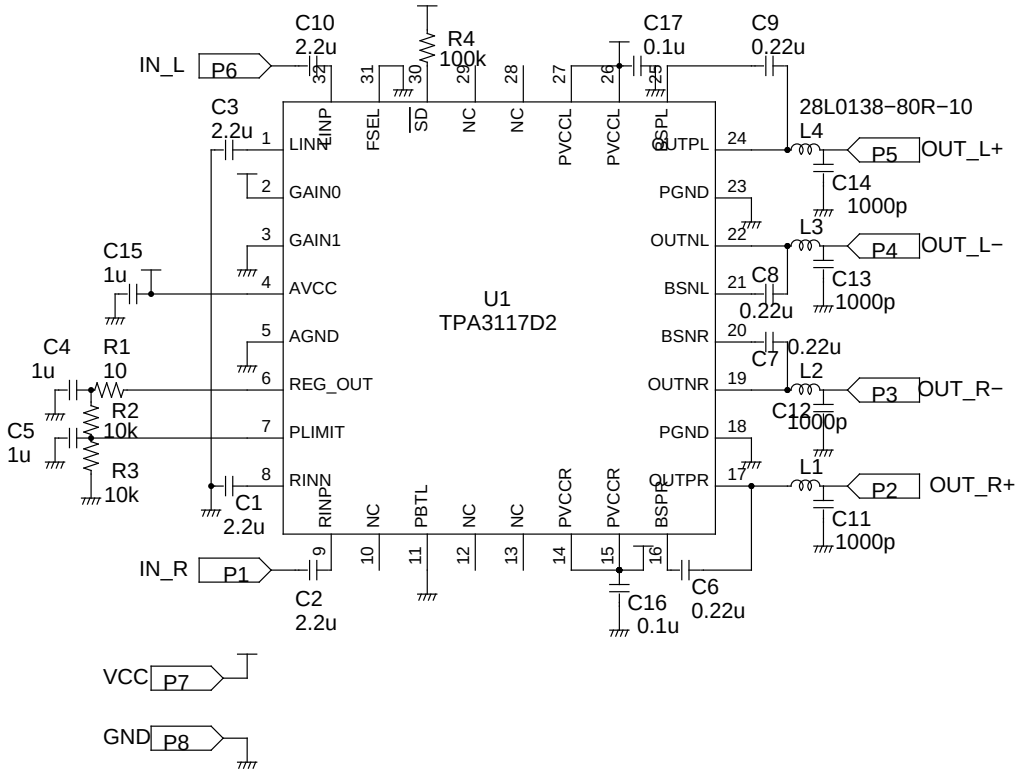

TITLE Speaker & Headphone Amplifier (Speaker amp. module)	
FILE:	REVISION: 2014−01−19
PAGE OF	DRAWN BY: T. Nakagawa